Rating	Input:6V~33V DC Voltage Tolerance: +/- 1% (0.1V @ 12V, 0.2V @ 24V) Blue LED display. Reverse polarity protection Surge protection up to 35V/400W
Insulation Resistance	DC 500V 100MΩ Min.
Operating Temperature	-20℃~50℃

Mounting Hole

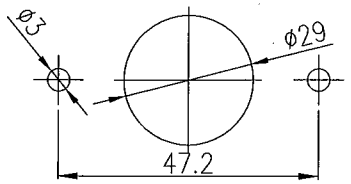

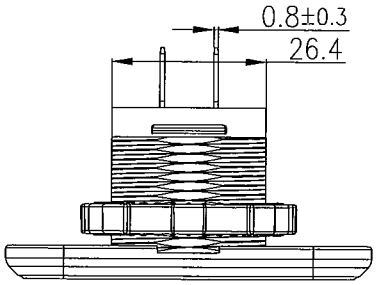

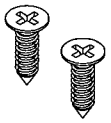

Screw in Bulk
Φ4XL14

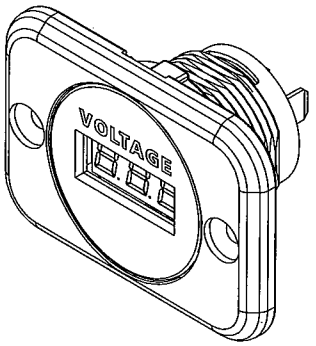

原稿
2019.3.08
研發部

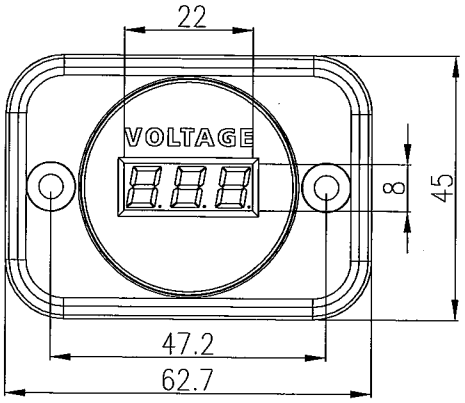

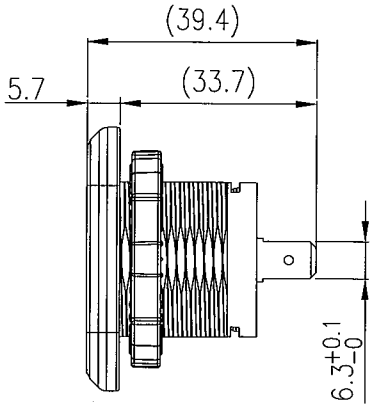

Ground Tab
Quick Terminal(.250")

Positive Tab
Quick Terminal(.250")

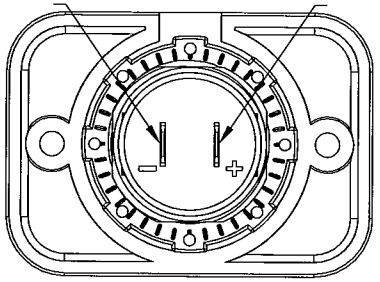

Tolerances ±0.5Unless Otherwise Specified

Date	Name	Description	No.
			△
			△

Drawn	Checked	Approved	SCI BOM No.	157 0048	Model Name	DC Voltmeter	
方婷鳳	孔祝源	黃啟明	Customer No.		Model No.	A25-1-PS1-BB3-U	Rev.
02/25/'19	3/4/19	3/4/19	Unit	mm	Shin Chin Industrial Co., Ltd.		0